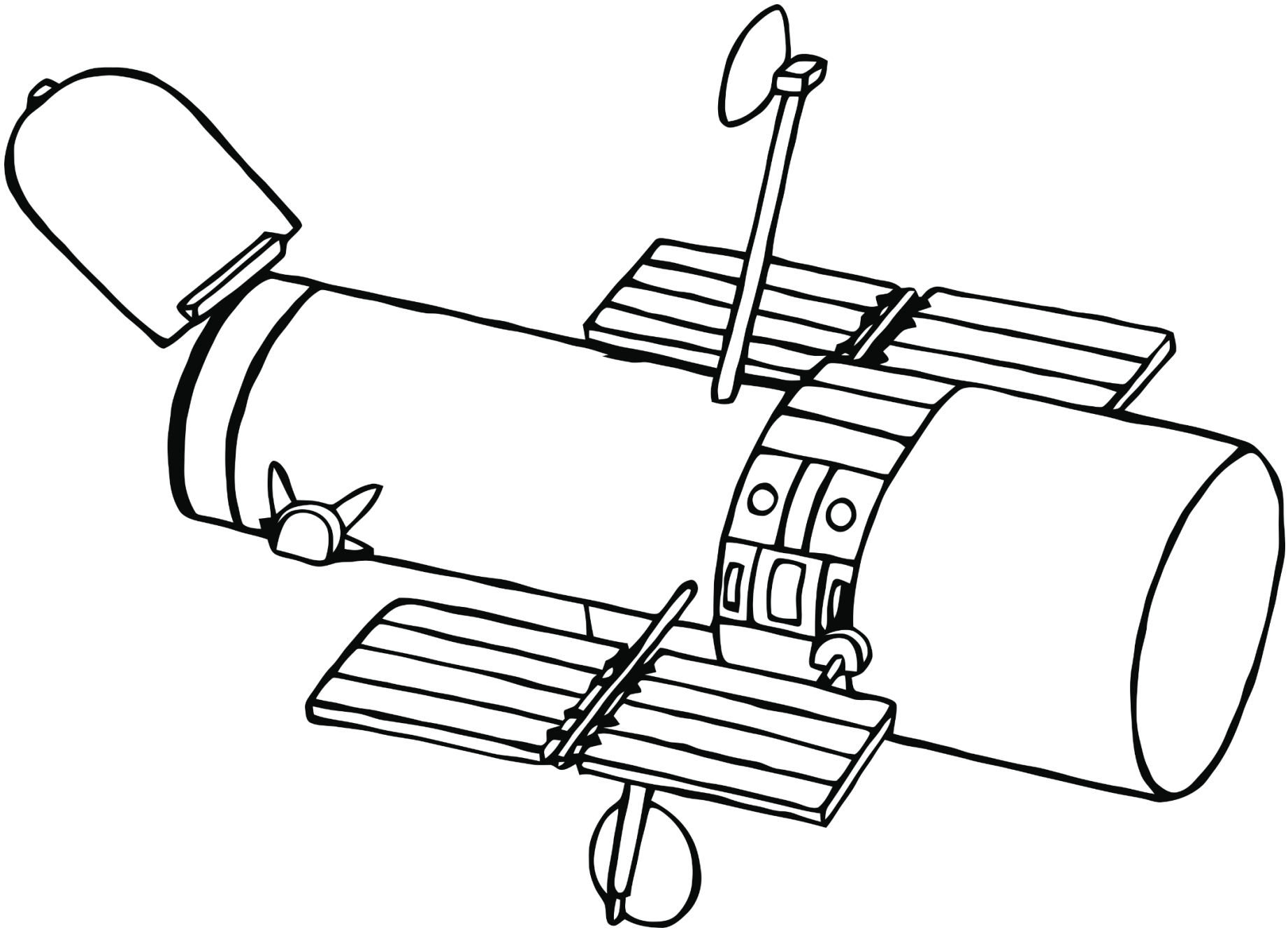

© 2019 Little Owls Resources

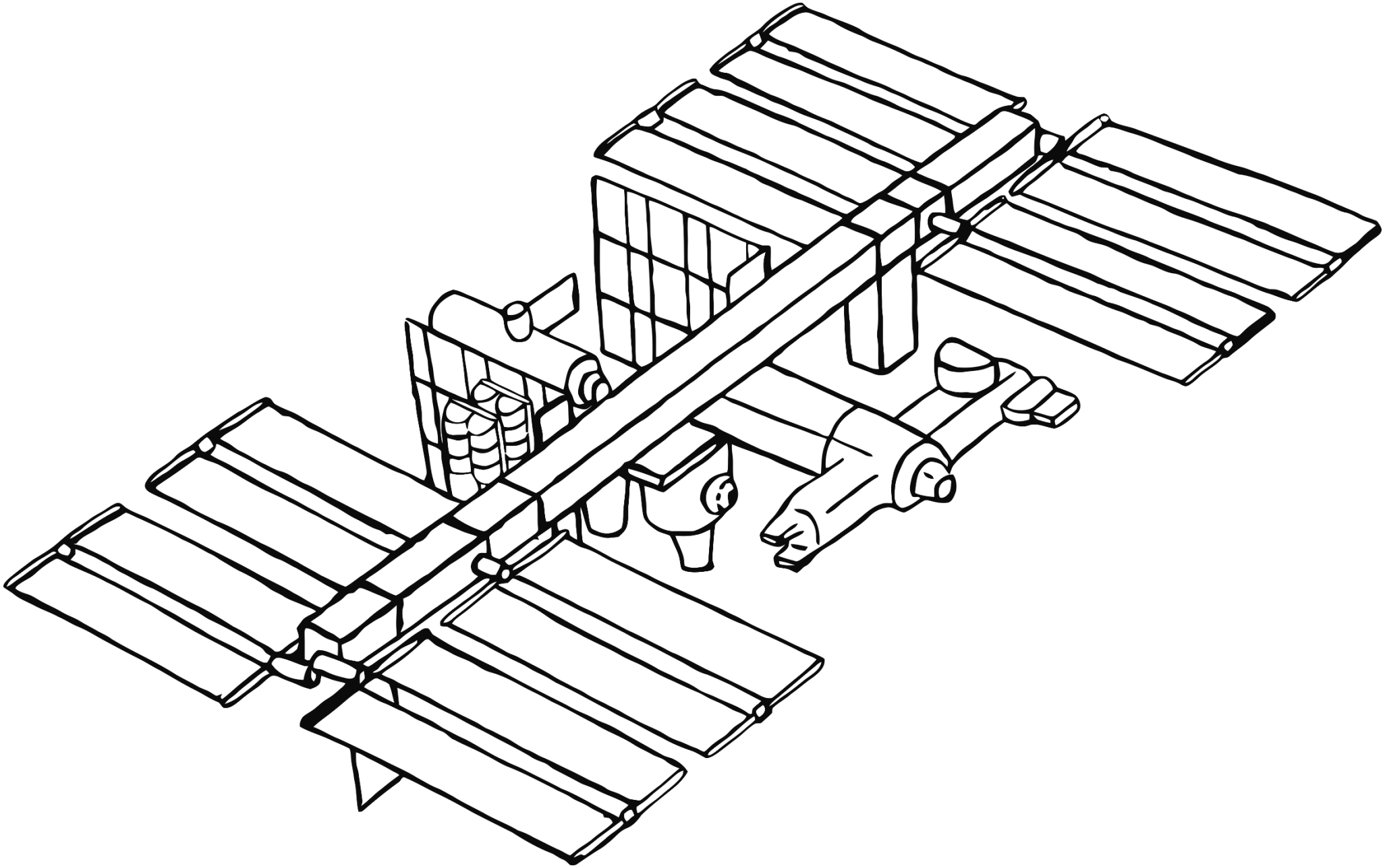

© 2019 Little Owls Resources

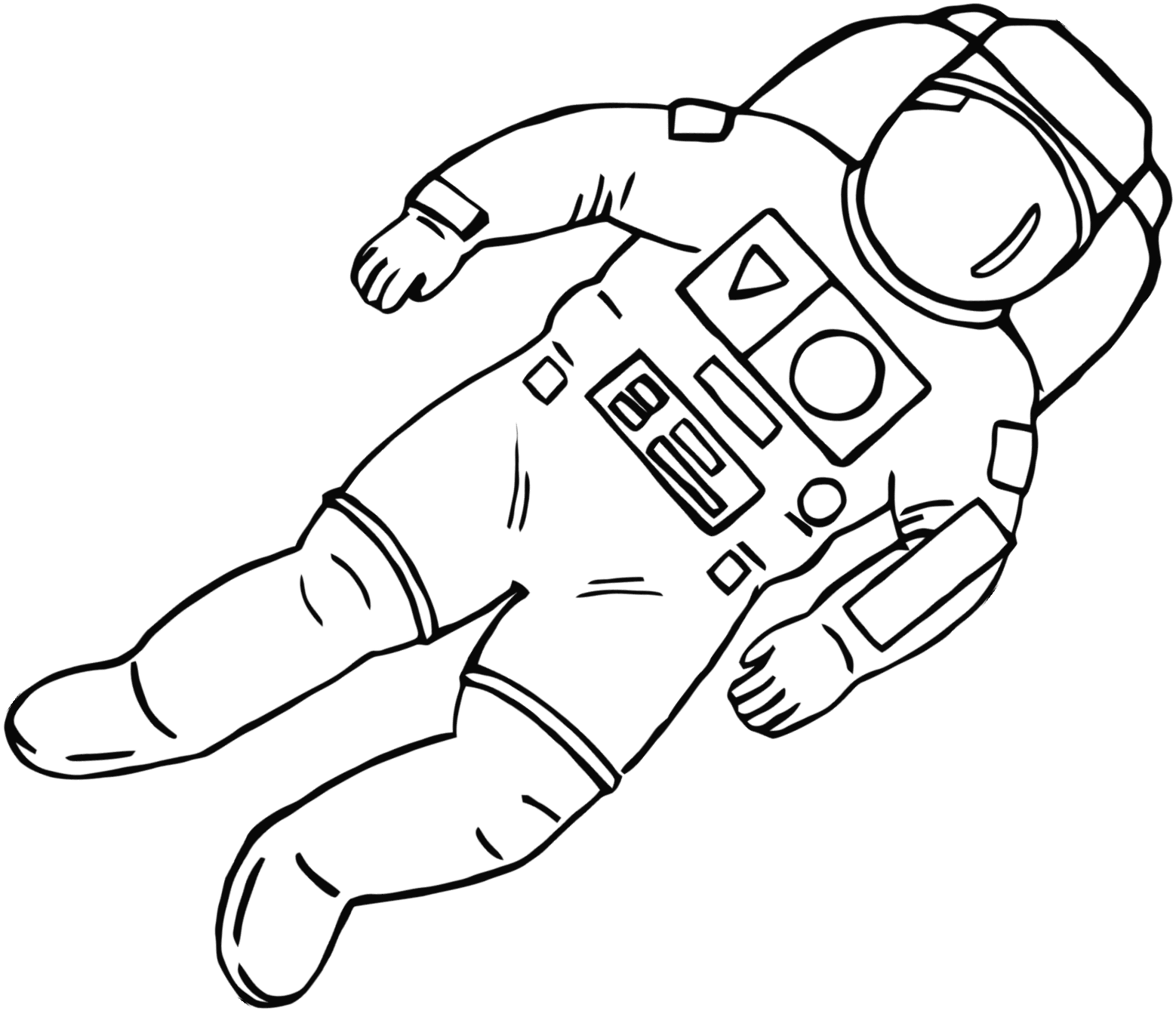

© 2019 Little Owls Resources

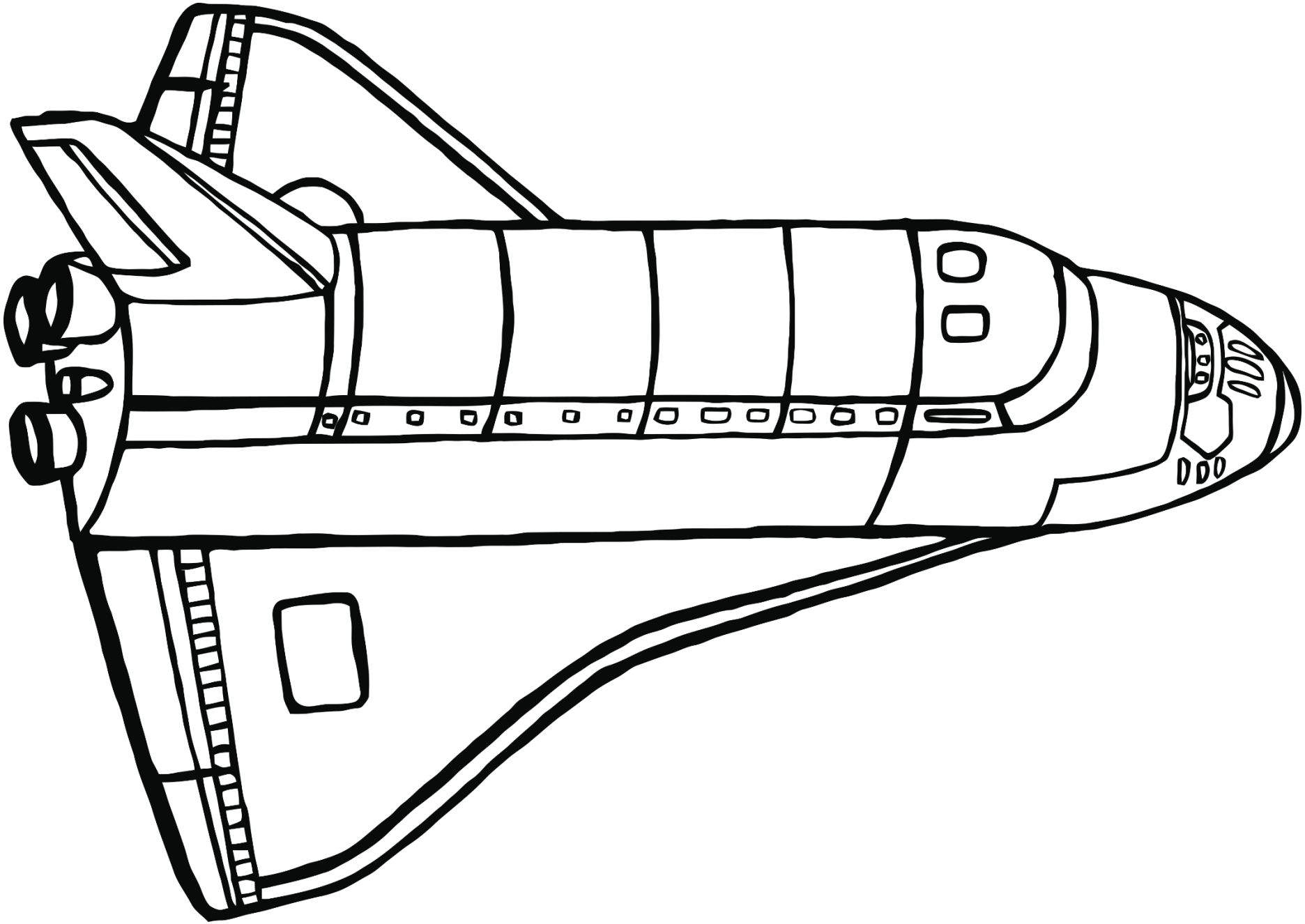

© 2019 Little Owls Resources

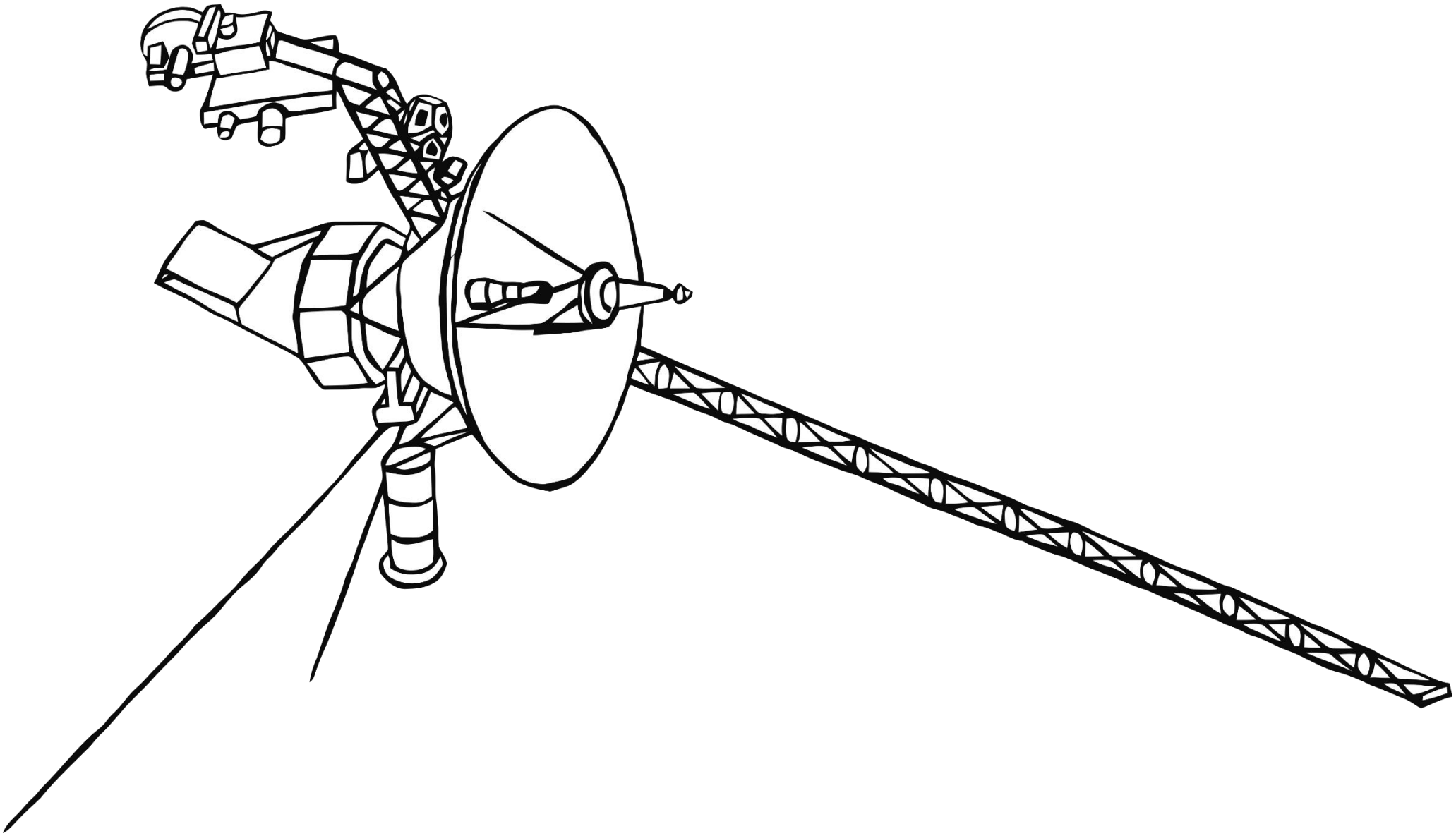

© 2019 Little Owls Resources

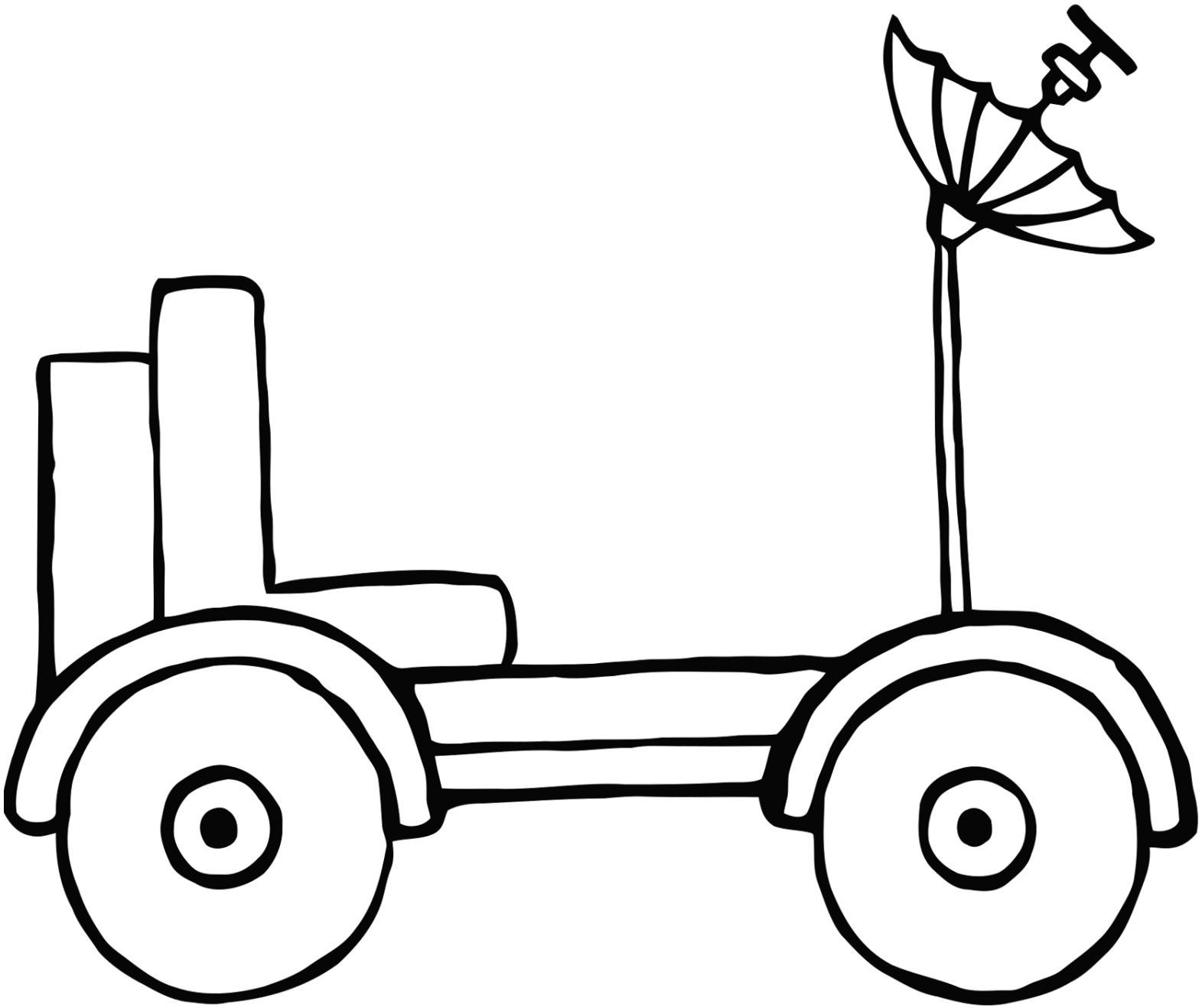

© 2019 Little Owls Resources

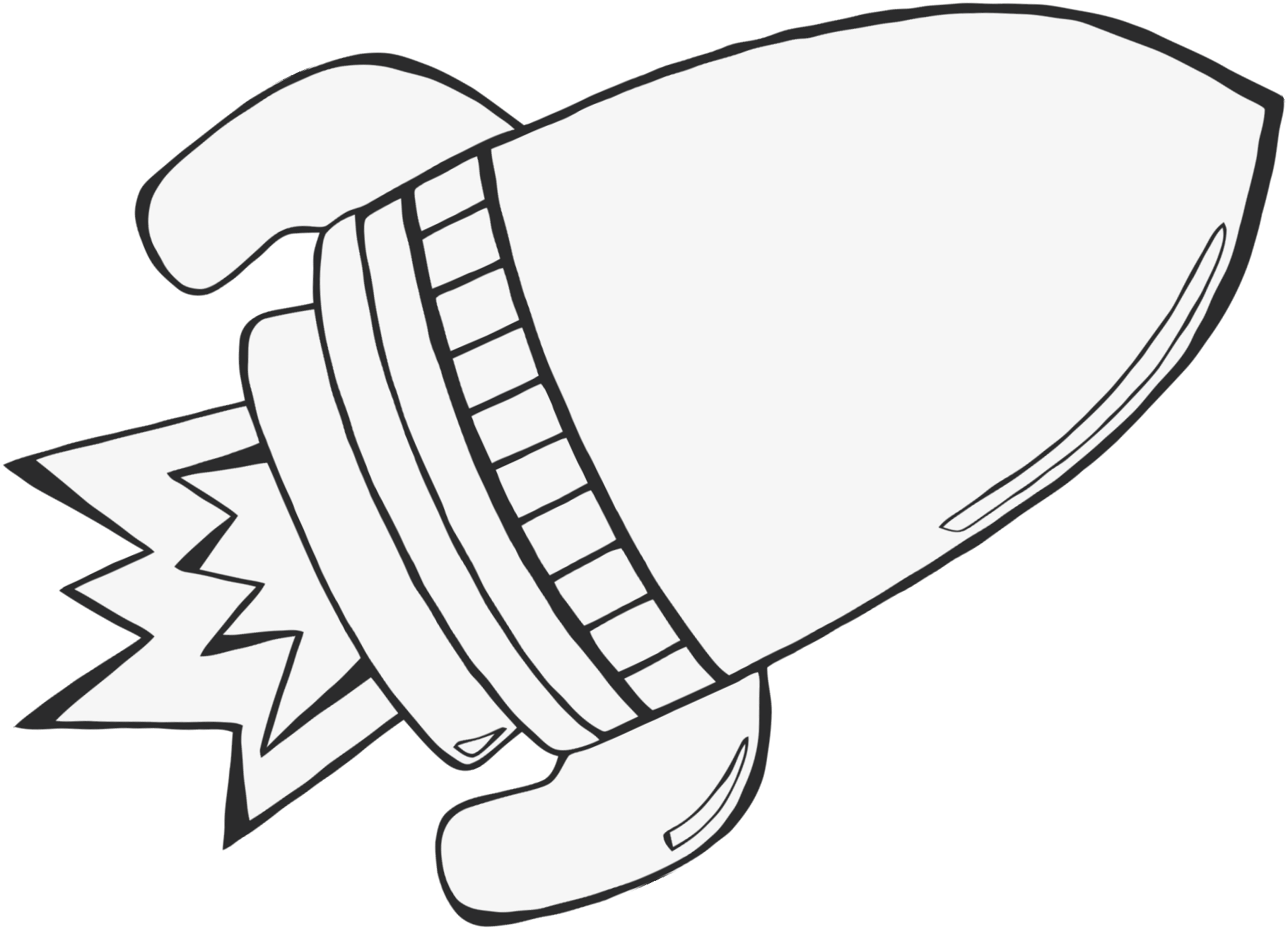

© 2019 Little Owls Resources

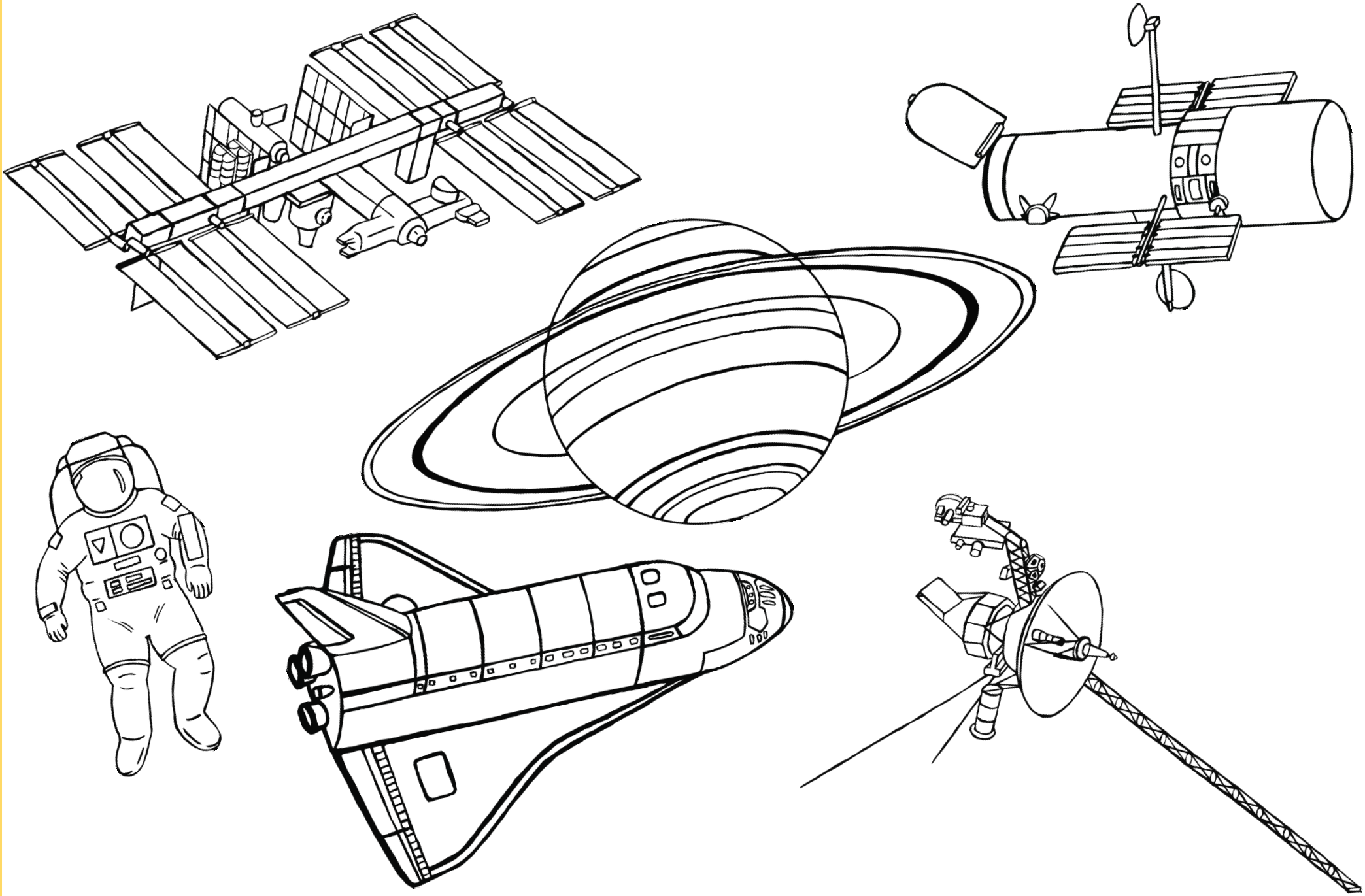

© 2019 Little Owls Resources