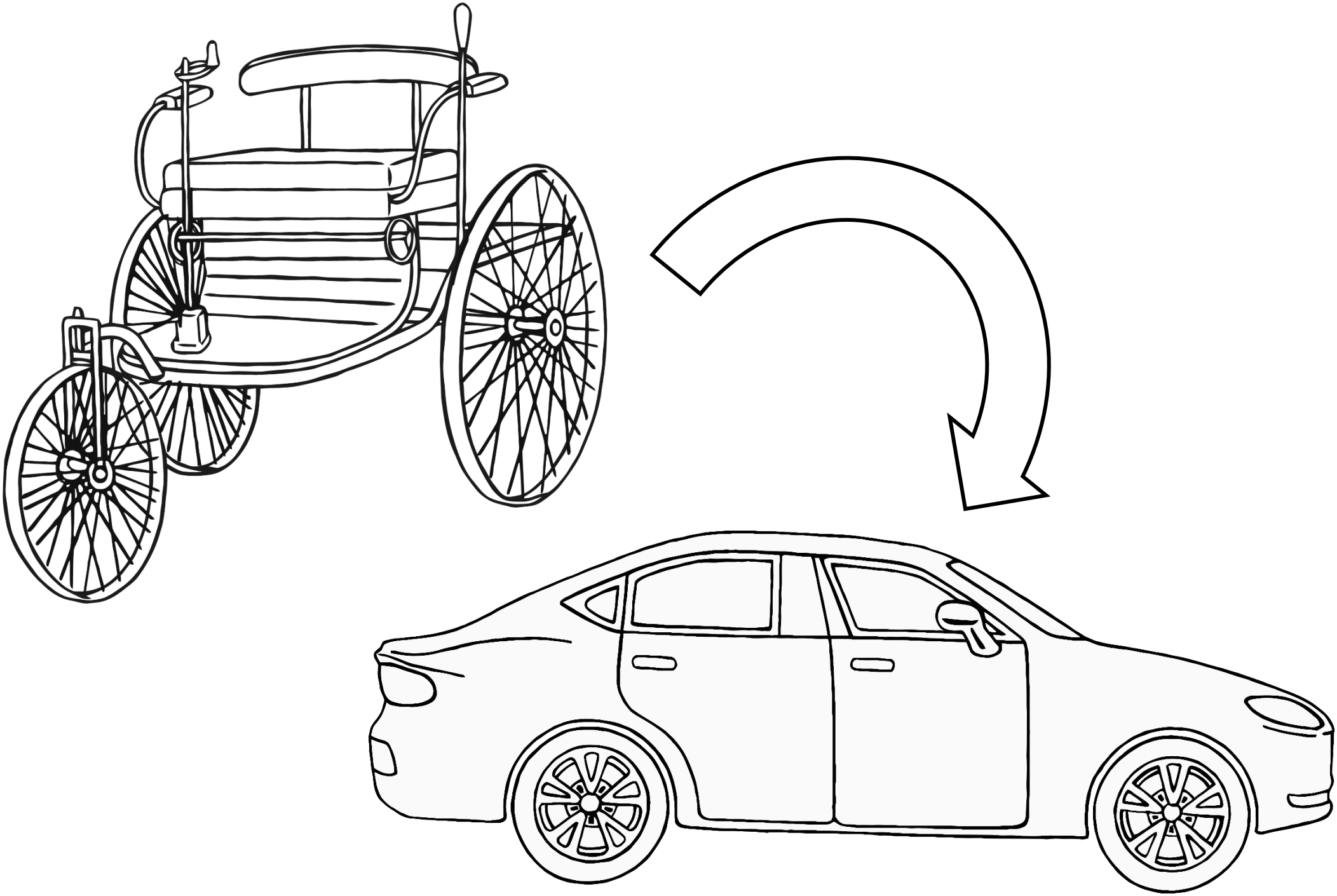

© 2020 Little Owls Resources

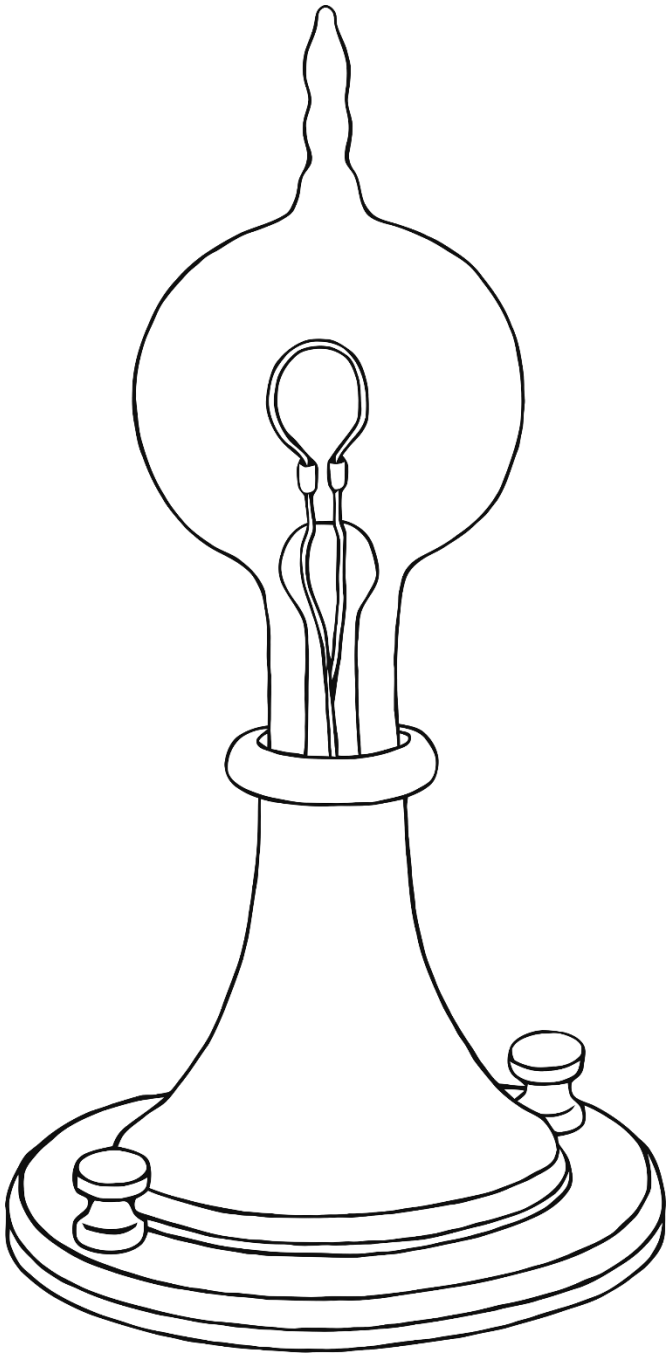

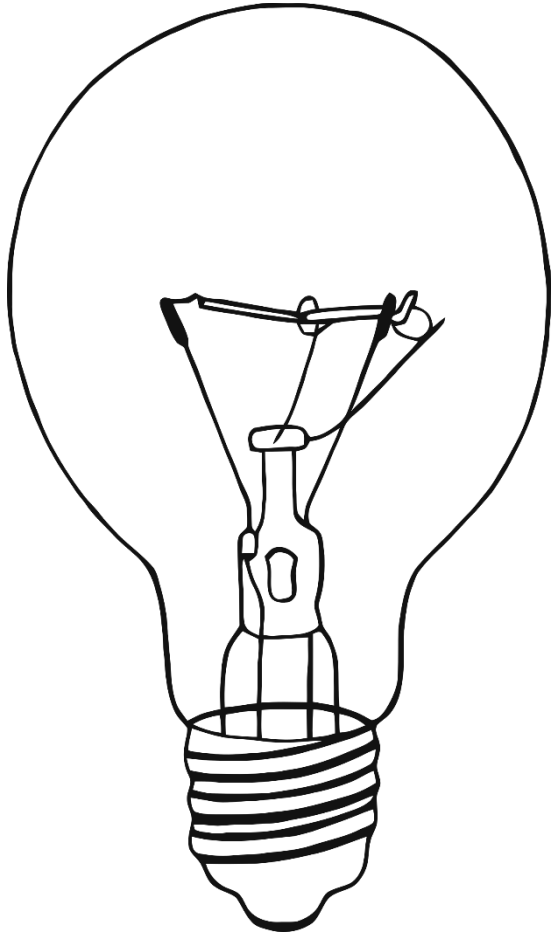

© 2020 Little Owls Resources

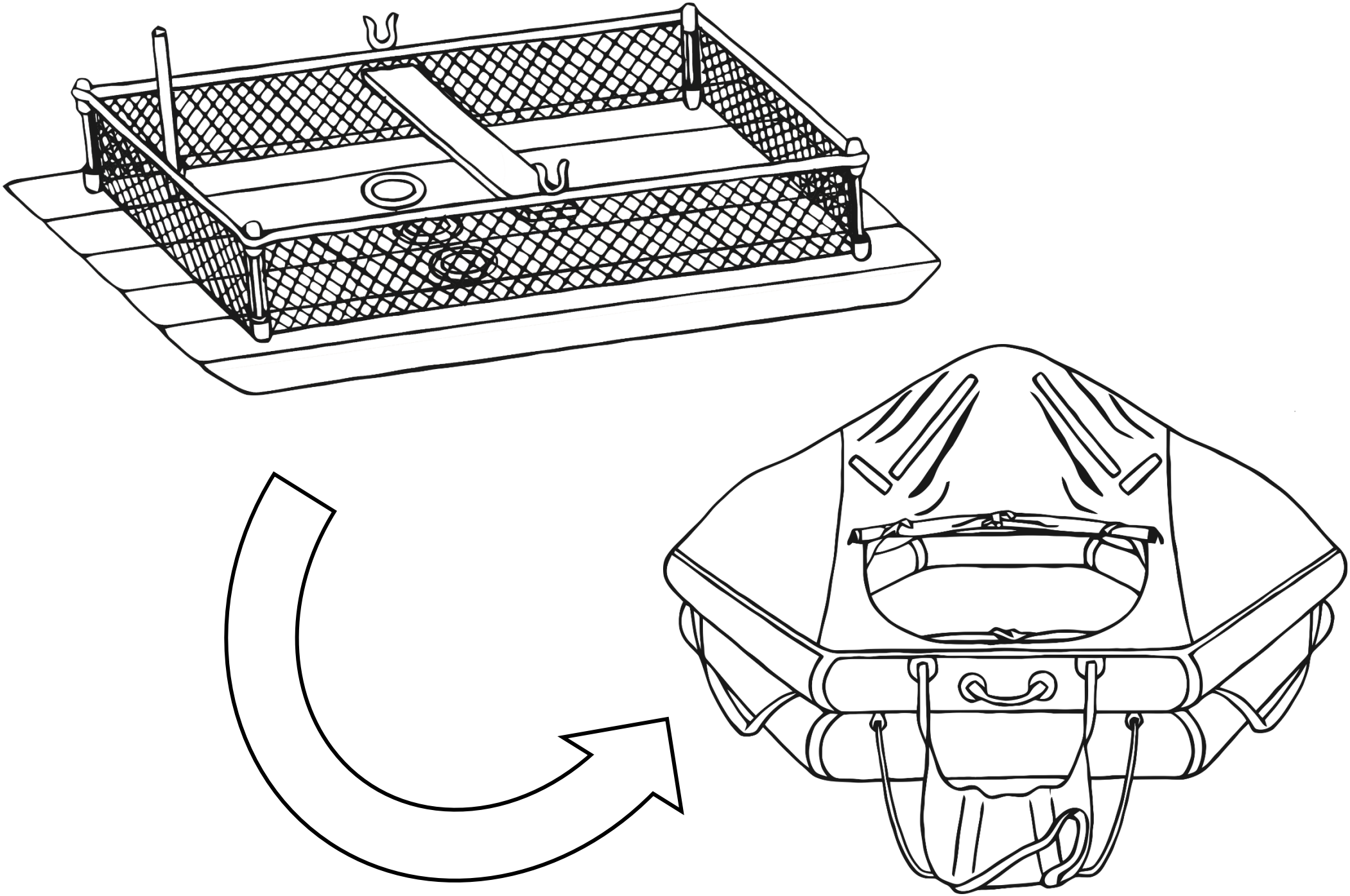

© 2020 Little Owls Resources

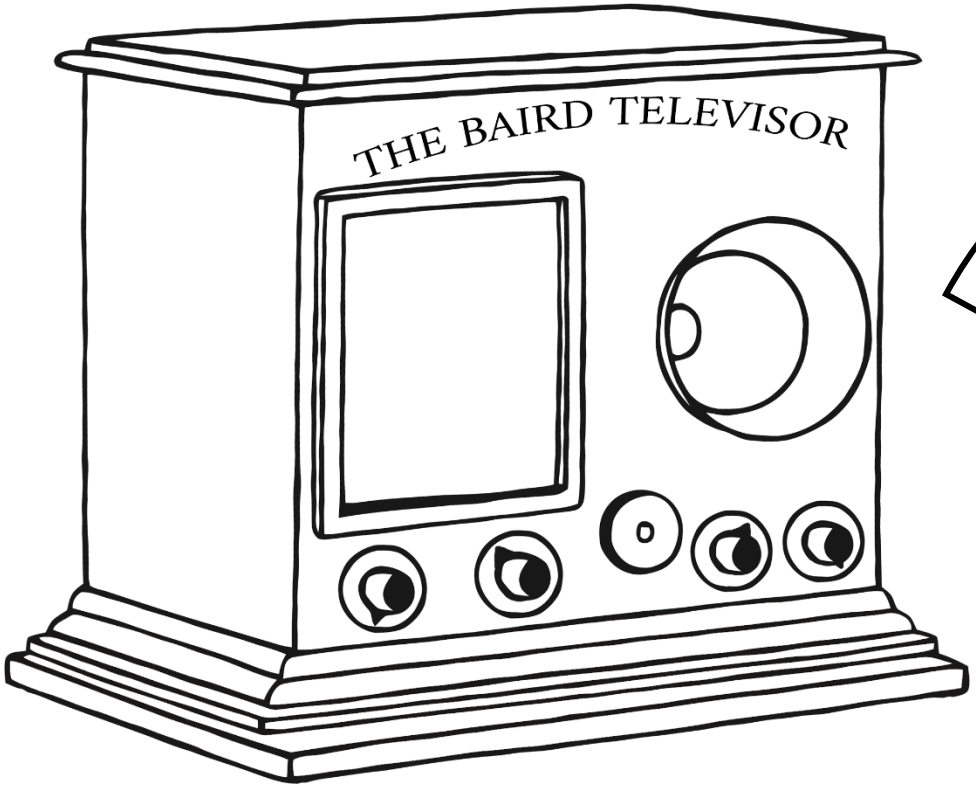

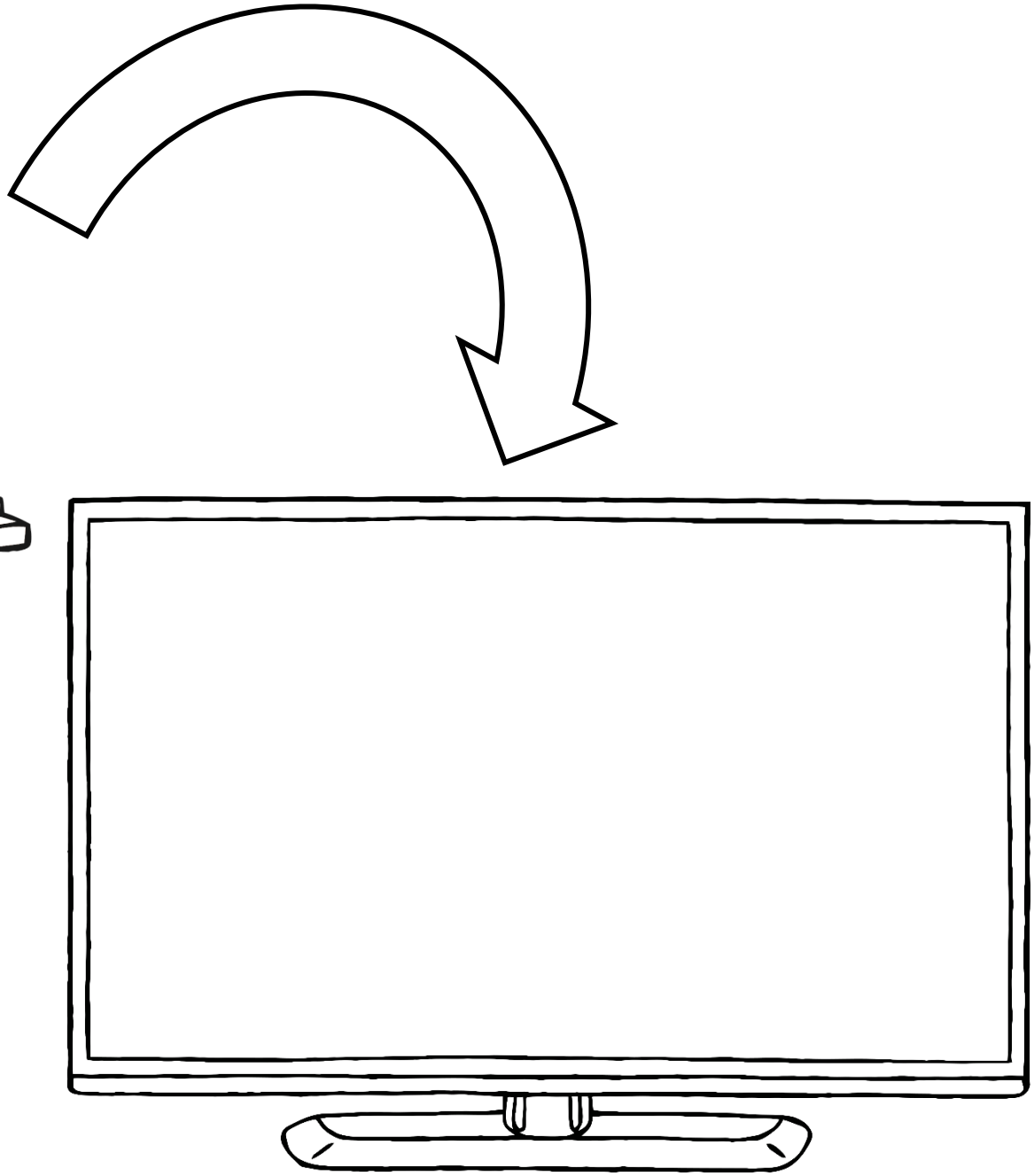

© 2020 Little Owls Resources